COLLIDER3000

IP66 Full Color LED Strobe

720*5W RGBW 4-in-1 LED module
210000lumen output
Color temperature 2800K ~ 10000K
60 individually controllable segments for dynamic effects
Built-in Macro for fast programming
Easy switch between long bright and strobe
Two-layer foreground and background colors and effects
Advanced thermal design
IP66-rated tour-grade construction
DMX RDM SACN and Art-Net control

Color System

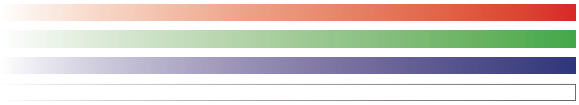

Beam Angle 112°

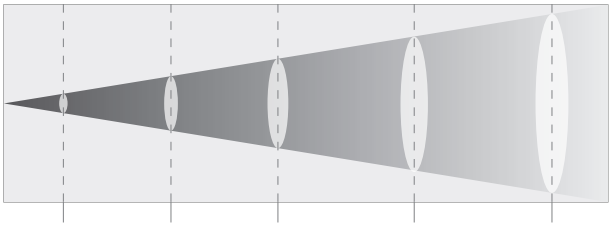

Distance(m)	5	10	15	20	24
Illuminance(lux)	811	203	90	50	32

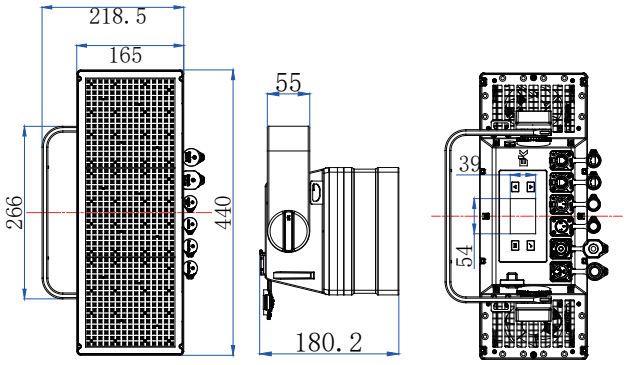

Front Side Back

PHOTOMETRICS	
Light Source	3600W RGBW 4-in-1 LED
Output	All: 210000lm (Peak Value)
Luminous Flux	All:800Lux@5m
Color Temperature	2800K~10000K
Beam Angle	112°
Field Angle	158°
CRI	CRI>90, Ra>90
LED Life	30000H

FEATURES	
Color System	RGBW
Pixel Matrix	5*12
Strobe	1~30Hz
Dimming	0 ~ 100% linear dimming

CONTROL	
Protocol	DMX512/RDM/sACN/Artnet
DMX Channel	4CH/8CH/240CH/244CH/124CH/ 148CH/76CH/52CH/16CH/28CH/20CH/16CH/8CH/15CH/251CH/27CH
Frequency	1KHz/2KHz/4KHz/6KHz/25KHz
Built-in programs	Yes
Display	2.8 inch TFT display

POWER	
Mains	100 – 240 VAC , 50/60 Hz
Consumption	Static:230V@985W;Strobe Peak:230V@ 3400W
Power connections	Power In/Out, linking up to 2pcs
Data connections	RJ45; DMX In/Out, linking up to 32pcs
Power Factor	230V@0.95
Ambient	-15~45℃

PHYSICAL	
Size	440*180.2*218.5mm
Weight	9.4Kg
IP rating	IP66
Cooling	Heat sink with noiseless fan
Housing	Magnesium Alloy