Ksmart^{S}

COMPACT LED MOVING SPOT WITH CMY

- 600W 6000K LED engine
- Incredibly 20300 lumen output, the brightest fixture in its class
- Extremely even spot with flawless color consistency from center to edge
- Linear CMY + color wheel + CTO for vibrant color mixing
- CRI≥90(wth CRI enhancement filter)
- Animation wheel, dual frost, dual gobo wheel
- Bi-directional 4-facet prism with variable speed
- 16-bit dimming with perfect SPWM control

Color

Roatating Gobo

Fixed Gobo

Animation

Beam Angle 6°

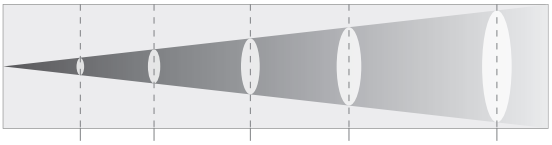

Distance (m)	5	7	10	15	20
Llluminance (Lux)	74300	37908	18575	8255	4643
Diameter(m)	0.52	0.73	1.04	1.56	2.08

Beam Angle 50°

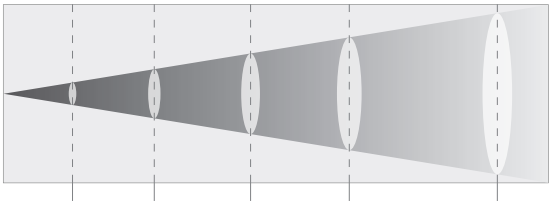

Distance (m)	1	3	5	7	10
Llluminance (Lux)	47620	5290	1905	972	476
Diameter(m)	0.93	2.79	4.66	6.51	9.3

PHOTOMETRICS	
Light Source	600W 6000K LED engine
Fixture Output	20300lm
CCT	3200K~6000K
CRI	Up to 90(wth CRI enhancement filter)
LED Life	20000hrs
Beam Angle	6° ~ 50°

KEY FEATURES	
Pan	540° (16bit resolution)
Tilt	270° (16bitresolution)
Color System	CMY + CTO + 7 color filters + open
Gobo System	1 rotating gobo wheel (7 + open)
	1 fixed gobo wheel (9 + open)
Animation	Bi-directional animation wheel with variable speed
Frost	1°/5° 0%～100% light forst
Strobe	0 ~ 30Hz
Dimming	4 dimming curves, 0~100% variable
Prism	Bi-directional 4-facet prism with variable speed

CONTROL	
Protocol	DMX512 / RDM
DMX Channel	25CH
Data Connection	3pin + 5pin XLR In / Out for DMX, llinking up to 25pcs
Display	2.83-inch TFT display

POWER	
Mains	100 - 240 VAC, 50/60 Hz
Power Connection	PowerCON In/Out, linking up to 2pcs
Consumption	760W/120V; 740W/230V
Power Factor	0.96 @ 230V , 0.99 @ 120V
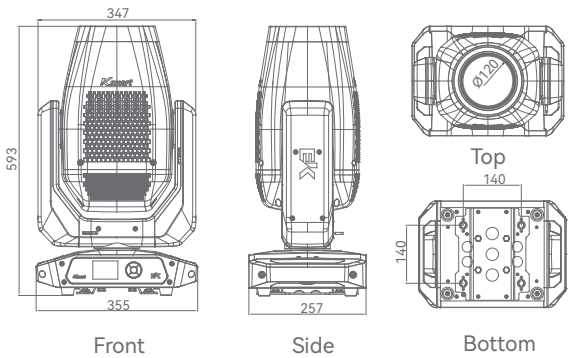
PHYSICAL	
Operating Tempt	-10℃~45℃
Cooling	Heat pipe cooling system with low noise fan
Dimension	355 x 257 x 593 mm
Weight	24kg
Accessory	Power Cable